55W Single Output with Battery Charger

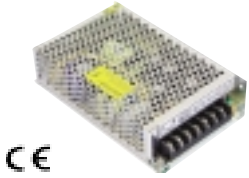

- Universal AC input / full range
- Protections: overload/over voltage/short circuit
- Battery low protection
- Charging current limited
- Auto switch when power off (UPS function)
- 2 years warranty
- F605 160 x 98 x 39(mm)

AC input voltage range ..... 85~264VAC
Input frequency ..... 47~63Hz
Inrush current ..... cold start, 20A/115V, 40A/230V
Input leakage current ..... ＜0.7mA/ 230VAC
Line regulation (full load) ..... ≤±0.5%
Output voltage adjust range ..... V_1: ± 5% of rated output voltage
Output overload protection ..... 110~150%
Output over voltage protection ..... 115~150%
Withstand voltage ..... I/P - O/P: 3.0KVAC/1min
I/P - F/G: 1.5KVAC/1min
O/P-F/G: 0.5KVAC/1min
Rise time ..... 50ms@full load (typical)
Hold up time ..... 20ms@full load (typical)
Operating temp. & humidity ..... -10℃~+50℃, 20%~93%RH (non condensing)
Storage temp. & humidity ..... -20℃~+85℃, 20%~95%RH (non condensing)
Safety standards ..... meet GB4943, UL60950, EN60950
EMC standards ..... meet GB9254, EN55022 classB
EN61000-3-2,3, EN61000-4-2,3,4,5,6,8,11
Cooling method ..... convection

Model	DC Output		R&N	Efficiency
HF55W-SB-13.8	13.8V	4.0A	100mV	71%
	13.4V	0.23A(Charger)		
HF55W-SB-27.6	27.6V	2.0A	100mV	74%
	26.5V	0.16A(Charger)		
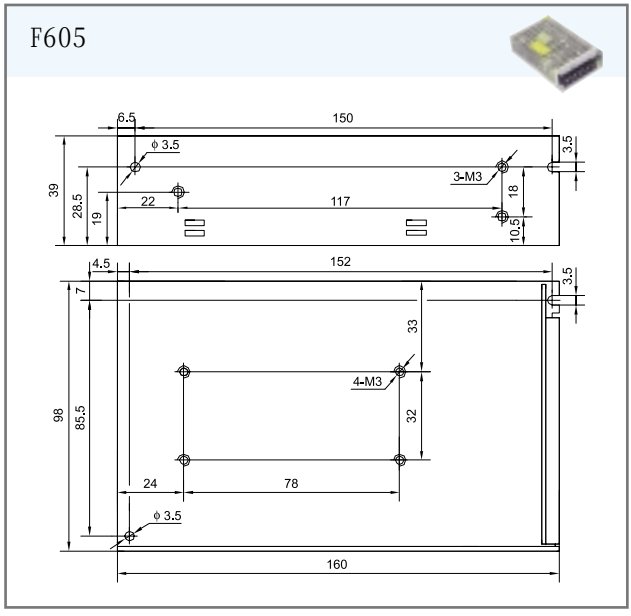
Drawing