40W Single Output with Battery Charger

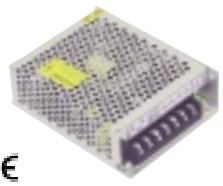

- Universal AC input / full range
- Protections: overload/over voltage/short circuit
- Battery low protection
- Charging current limited
- Auto switch when power off (UPS function)
- 2 years warranty
- F603 129 x 98 x 40(mm)

AC input voltage range	85~264VAC
Input frequency	47~63Hz
Inrush current	cold start, 20A/115V, 40A/230V
Input leakage current	＜0.7mA/ 230VAC
Line regulation (full load)	≤±0.5%
Output voltage adjust range	V_1: ± 5% of rated output voltage
Output overload protection	110~150%
Output over voltage protection	115~150%
Withstand voltage	I/P - O/P: 3.0KVAC/1min I/P - F/G: 1.5KVAC/1min O/P-F/G: 0.5KVAC/1min
Rise time	50ms@full load (typical)
Hold up time	20ms@full load (typical)
Operating temp. & humidity	-10℃~+50℃, 20%~93%RH (non condensing)
Storage temp. & humidity	-20℃~+85℃, 20%~95%RH (non condensing)
Safety standards	meet GB4943, UL60950, EN60950
EMC standards	meet GB9254, EN55022 classB EN61000-3-2,3, EN61000-4-2,3,4,5,6,8,11
Cooling method	convection

Model	DC Output		R&N	Efficiency
HF40W-SB-13.8	13.8V	2.9A	100mV	70%
	13.4V	0.23A(Charger)		
HF40W-SB-27.6	27.6V	1.4A	100mV	73%
	26.5V	0.16A(Charger)		
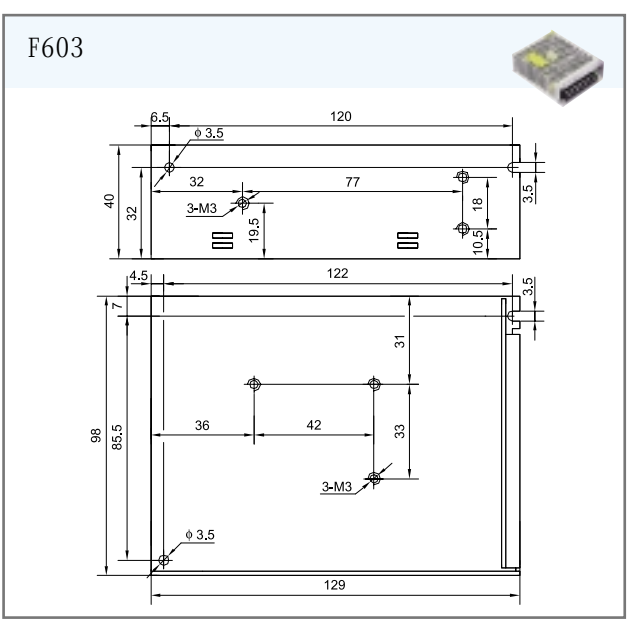
Drawing